Mono Crystalline PERC PV Modules

PIXON
Redefining Solar

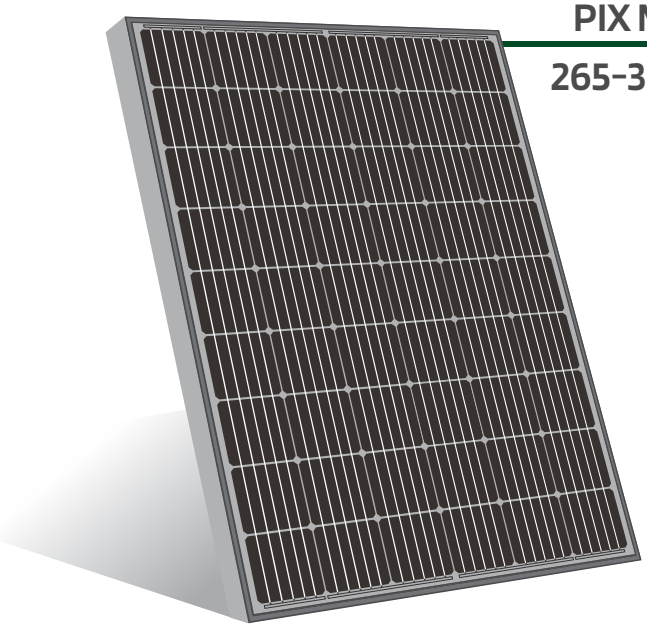

PIX MP3 54

265-300 Wp

Power Tolerance
+4.99Wp

Efficiency upto
19.85 %

Module Warranty
10 Years

Output Warranty
25 Years

KEY FEATURES

- **PID Resistance** with long term reliability.
- **Better Performance** even at low irradiation.
- Maximum System Voltage: **1500 V DC.**
- Increased string length & **low BOS cost.**
- Withstand upto **5400 Pa of snow load.**
- Withstand upto **2400 Pa of wind load.**
- **Rigorous Testing Criteria** 100% EL Inspection ensuring defect-free modules.

IDEAL FOR: Utility Projects, Commercial & Industrial Projects, Residential Projects, Institutional Projects, Off-grid Projects

PIXON GREEN ENERGY PRIVATE LIMITED

Manufacturing Unit: R.S. No.: 157/1, 158/1, 158/2, 165/1, 166 of Khijadiya Nana, R.S. No.: 15/1, Rajkot – Jamnagar Highway, Paddhari, Rajkot – 360110

1800 108 8800 | sales@pixonenergy.com

ABOUT PIXON

PIXON is a venture of the Marwadi group. It is equipped with the state-of-the-art technology and turnkey machinery of 1.3 GW line capacity for solar modules and houses clean room environment facility to 1 GW manufacturing line for EVA films. As the world adheres to solar energy revolution, PIXON envisions to globally provide efficient solar energy products and solutions. Thus, enhance and contribute to Global Climate Sustainability.

CERTIFICATIONS

ALMM

ALMM APPROVED

IEC (International Electrotechnical Commission)
- IEC 61215-1:2016
- IEC 61215-2:2016
- IEC 61730-1:2016
- IEC 61730-2:2016
- IEC TS 62804-1
- IEC 61701 End.2:2011 Severity-6
- IEC 61853-1
- IEC 60904-1

BIS: Bureau of Indian Standards
- IS 14286:2010
- IS 61730-1:2004
- IS 61730-2:2004

US Certification
- UL 61215-1:2017
- UL 61215-2:2017
- UL 61730-1:2017
- UL 61730-2:2017

ISO Certification
- ISO 9001:2015
- ISO 14001:2015
- ISO 45001:2018 (OHSAS)

CE Mark Testing & Certification

CLASS II

CLASS II

*Due to continuous product updation, specifications may change without notice.

Solar is the new Green!

D/MP3/54/071025/E-01-01

TECHNICAL DATASHEET

PIX MP3 54 265-300

MONO CRYSTALLINE PERC PV MODULES

PIXON
Redefining Solar

Mechanical DIAGRAMS

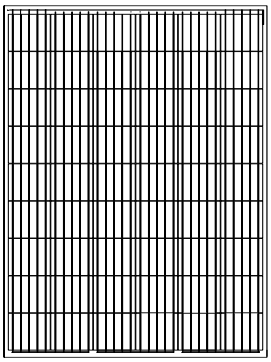

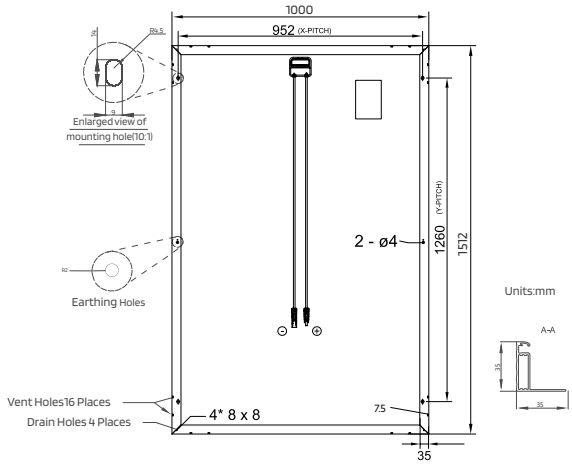

Mechanical Data

Cells specifications (Number, Type, Size)	54 (6X9), 5BB Mono Crystalline PERC cells, 158.75mm X 158.75mm
Module Dimensions	1512mm X 1000mm X 35mm
Weight	18 kg
Front glass	High transmission Low iron tempered glass, AR coated, 3.2 mm (T)
Embedding	Low shrinkage PID resistance EVA
Back sheet	PVDF
Junction box	IP67/IP68, 4-Rail
Number of diodes	3 Bypass diodes of 15A
Cables & Connectors	Cable length 1200mm, Ø 4mm² & MC-4 Connectors
Frame	Anodized Aluminum Silver Frame (Black available on request)

ELECTRICAL DATA (All Data refers to STC (Tested data base on STC : 25°C, 1.5AM, 1000 W/m²))

Peak Power	Pmax [Wp]	265	270	275	280	285	290	295	300
Module efficiency	η [%]	17.53	17.86	18.19	18.52	18.85	19.18	19.51	19.85
Open-circuit voltage	Voc [V]	34.99	35.15	35.32	35.53	35.69	35.86	36.07	36.45
Short-circuit current	Isc [A]	9.92	10.00	10.08	10.17	10.25	10.29	10.35	10.41
Max Rated voltage	Vmp [V]	29.81	29.97	30.13	30.29	30.51	30.67	30.94	31.21
Max Rated current	Imp [A]	8.89	9.01	9.13	9.25	9.34	9.46	9.54	9.62

1) STC: 1000 W/m² irradiance, 25°C cell temperature, AM 1.5g spectrum according to EN 60904-3.
2) NOCT: 800 W/m² irradiance, 20°C cell temperature, AM 1.5g spectrum according to EN 60904-3.
3) Average relative efficiency reduction of 5% at 200 W/m² according to EN 60904-1.

Electrical Parameters at NOCT

Peak Power	Pmax [Wp]	194.63	198.33	202.02	205.68	209.37	213.02	216.69	220.40
Open-circuit voltage	Voc [V]	32.76	32.91	33.06	33.27	33.42	33.57	33.77	34.13
Short-circuit current	Isc [A]	7.94	8.00	8.06	8.13	8.20	8.23	8.28	8.33
Rated voltage	Vmp [V]	27.91	28.06	28.21	28.36	28.56	28.72	28.97	29.22
Rated current	Imp [A]	7.11	7.21	7.30	7.40	7.48	7.57	7.63	7.69

Thermal Data

Tc of open circuit voltage (β)	-0.2885% / °C
Tc short-circuit current (α)	0.0576% / °C
Tc rated power (δ)	-0.3797% / °C
NOCT (Normal Operating Cell Temperature)	45°C ± 2°C
Temperature range	-40°C to 85°C

Permissible Operating Conditions

Max. system voltage	1500 V DC
Max. reverse current / fuse rating	15 A (IEC) / 20 A (UL)
Protection class	Class A (Safety Class II)
Mechanical load capacity	5400 Pa (Snow Load), 2400 Pa (Wind Load)

Packaging Information

No. of modules per pallet	31
No. of pallets per container (40 HC)	28
Pallet dimensions (in mm)	1542 X 1151 X 1170 (L X W X H)
Pallet weight	618 kg

Warranty

Product warranty	10 years
Performance warranty	Linear power warranty for 25 years with 2.5% for 1st year degradation and 0.60% from year 2 to year 25

characteristic graph

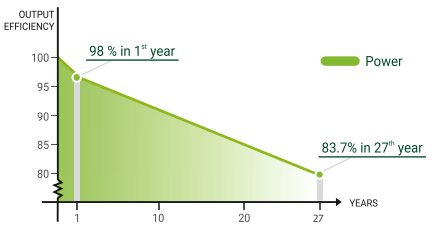

PERFORMANCE WARRANTY

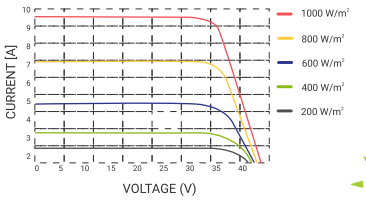

TYPICAL I-V CURVES

Average relative efficiency reduction of 5% at 200 W/m² According to EN 60904-1.
Measuring uncertainty ±3%

Solar is the new Green!

D/MP3/54/071025/E-01-01